ELSEVIER

Nuclear Instruments and Methods in Physics Research A 409 (1998) 643–645

NUCLEAR INSTRUMENTS & METHODS IN PHYSICS RESEARCH Section A

The HERA-*B* electron pretrigger system

C. Baldanza[a,b], A. Bertin[a,b], M. Bruschi[a,b,*], A. Collamati[a,b], A. Cotta-Ramusino[a,b], I. D'Antone[a,b], S. De Castro[a,b], R. Donà[a,b], A. Ferretti[a,b], D. Galli[a,b], B. Giacobbe[a,b], U. Marconi[a,b], M. Piccinini[a,b], N. Semprini-Cesari[a,b], R. Spighi[a,b], S. Vecchi[a,b], V. Vagnoni[a,b], F. Vigotti[a,b], M. Villa[a,b], A. Vitale[a,b], A. Zoccoli[a,b]

[a] *INFN, Sezione di Bologna, Italy*

[b] *Dipartimento di Fisica, Università di Bologna, via Irnerio 46, I-40126, Bologna, Italy*

Abstract

In this paper the pretrigger system designed for the electromagnetic calorimeter of the HERA-B experiment is described. This system will provide the electron candidates to the first-level trigger. The first results obtained with a whole readout and pretrigger prototype chain are also described.

1. Introduction

The HERA-B experiment [1] will run at the HERA proton ring at the DESY laboratory, with the main goal of measuring CP violation in the golden channel $B_0 \to J/\psi K_S^0$. The $b\bar{b}$ pairs being obtained in hadroproduction, a challenging effort must be done to reject background at the level of 10^6. To this aim a fast and efficient First-Level-Trigger (FLT) system has been designed [2].The trigger is based on a Kalman filter algorithm: once some candidates have been found in the Electromagnetic Calorimeter (ECAL) (or in the muon chambers) a backward search is started looking for hits in four tracking layers placed between these systems and the magnet. If hits are found (in the proper regions of interest) the track parameters are refined and as a final step, starting from the tracks momentum and direction, an invariant mass of a lepton pair is calculated and the J/ψ mass hypothesis is tested.

The FLT system designed allows to apply high transverse momentum cuts on reconstructed tracks too.

A particular high-p_t trigger based on the information given by a pixel chambers system placed into the magnet is also foreseen, in order to trigger on CP violating $B_0 \to \pi^+\pi^-$ final state.

The ECAL is a matrix of about 6000 shashlik-type towers [1] readout by means of photomultiplier tubes (PMT). The granularity of these towers is chosen in order to keep occupancy at 10% level with an energy threshold less than 200 MeV. The purposes of ECAL are to identify electromagnetic (em) cluster candidates at pretrigger level and to perform π/electron separation. To achieve these performances a readout and pretrigger system has been purposely designed.

The readout (13 bit dynamic range, 12 bit resolution) [3] is based on a fast digitization and logic

* Corresponding author. E-mail: bruschi@bo.infn.it.

0168-9002/98/$19.00
PII S0168-9002(97)01340-5

pipelining of analog PMTs signals. In the following, the designed pretrigger system is described (Section 2), and the first results obtained on prototype boards are reported (Section 3).

2. General description

The pretrigger has been designed to provide electron candidates to the FLT, after having calculated some relevant cluster parameters, such as:

- the total em cluster energy;
- the em cluster center of gravity;
- the energy of the bremsstrahlung photon (if any) radiated by the electron candidate.

To start the search for candidates a proper position-dependent energy threshold function is applied at readout board level [4]. The electromagnetic clusters develop typically on a 3×3 calorimeter towers matrix (nonet), and for this reason about 6000×9 combinations should be inspected to extract the few (typically 2) expected candidates per BX. One of the original features of the pretrigger system is that it needs only about 100 simple LUT-based processing units to extract quickly, from about 54 000 combinations, all the relevant physical quantities associated to a candidate, to be sent as 80 bit packets (message) to the FLT.

The block diagram of the pretrigger board is shown in Fig. 1. The input data are transmitted by the readout boards via a two wire serial synchronous protocol at about 40 MHz frequency and consist of eight bit (four per wire): seven bit are for the energy release in a single calorimeter tower, and one bit is a flag that indicates if the release of energy is above a preset threshold.

The serial data are transferred simultaneously to the Event Buffer & Multiplexer (EBM) and to the Local Maxima Finder Unit (LMFU). The EBM stores the data of an event (up to 50 calorimeter towers readout channels per pretrigger board organized into a matrix of 10×5 cells). The LMFU can identify up to three cells for BX having an energy release above threshold. The addresses of these cells are sent to the Process Controller (CTRL) that stores them into three FIFOs. Furthermore, the CTRL contains other FIFOs in which are stored the coordinates of the cells that

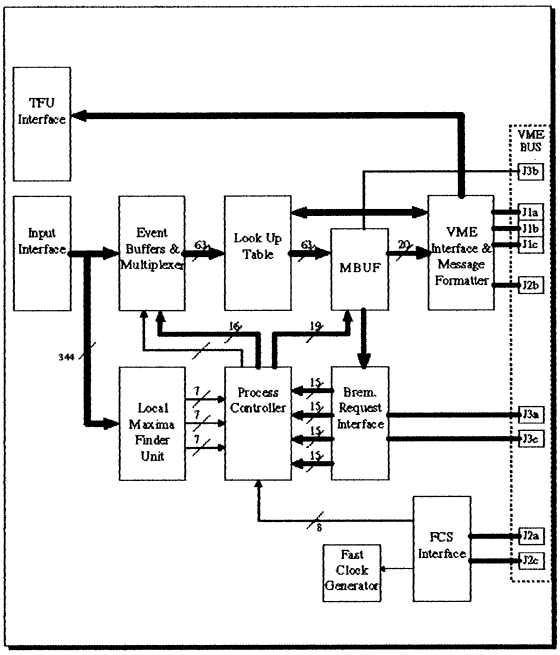

Fig. 1. Block diagram of the pretrigger board logic.

must be elaborated for the reconstruction of the Bremsstrahlung photon (BRM) energy. The designed logic is capable to search for BRM candidates into the board containing the electron candidate itself, or into the two closest boards. The coordinates at which to search for the BRM are easily calculated by the event kinematics. A sequencer within the CTRL extracts three coordinates for each BX from the FIFOs according to a suitable criterion of priority and it sends them to the EBM and to the Message Buffer (MBUF). The data coming from the EBM are elaborated by the LUT section, whose results are sent to the MBUF. The MBUF is a circuit composed by 8 dual port RAM and a controller that handles the flow of the data. The function of the controller is the storing of the results in the dual port RAM, the recognition of results coming from a main cluster elaboration and the ones coming from the Bremsstrahlung recovery and, finally, the extraction of the complete data. The final data are transferred to the VME Interface & Message Formatter (VIMF) in which the message for the TFU is assembled. This message is composed by a packet of four 20 bit words.

All the logic blocks have been implemented on XILINX 4000 series FPGAs, and all the operations are performed at a clock frequency (about 40 MHz) four times the HERA-*B* machine clock. The total expected latency in the case of three candidates per BX is less than 30 HERA-*B* clock cycles.

3. Test results

A complete ECAL readout and pretrigger electronics chain has been tested, including pretrigger data transmission to a FLT receiver emulator. The experimental setup at HERA-*B*, consisted of:

- Three readout board prototypes handling 96 channels.
- One pretrigger board prototype handling an 8×6 matrix of readout channels.
- One FLT receiver board prototype, handling the messages sent by the pretrigger board.
- One Fast Control System (FCS) board prototype. The FCS is the system designed to distribute all the logic signals necessary to HERA-*B* detectors synchronization and readout.

All these boards are 9U VME standards, except the FCS that is a 6U VME one.

The tests have been performed in the following way:

- known (and variable) patterns of energy were sent by the readout system. In this way one candidate per BX was fed at the input of the pretrigger board;
- the pretrigger message built after processing of the data was sent to the FLT receiver board;

The 80 bit message flow (@ 40 MHz transmission frequency) from the pretrigger board to the FLT receiver board was successfull and the energy of the candidate as well as the other message variables were correctly reconstructed, transmitted and consequently read by the FLT receiver board. No wrong transmission pattern were detected out of some 10^6 events taken with different pretrigger input conditions.

4. Conclusions

The preliminary test performed on a prototype ECAL readout and pretrigger chain showed the correct interfacing to the FLT system, and an important confirmation of the principle of working of the architecture designed for the HERA-*B* FLT system.

We want to stress that the designed pretrigger system features many original aspects for electromagnetic calorimetry systems, and with some modifications could be adapted to the needs of forthcoming high-energy collider experiments.

References

[1] T. Lohse et al., HERA-*B*: Proposal, DESY-PRC 94/02, 1994.
[2] D. Ressing, First level trigger for HERA-*B*, Proc. of Beauty '96, Nucl. Instr. and Meth. A 384 (1996) 131.
[3] G. Avoni et al., The ECAL readout system, HERA-*B* Note 96–182, 1996.
[4] A. Benedettini et al., The electromagnetic calorimeter of the HERA-*B* experiment, Proc. 6th Conf. on Calorimetry in HEP, Frascati Physics Series, vol. VI, pp. 817.