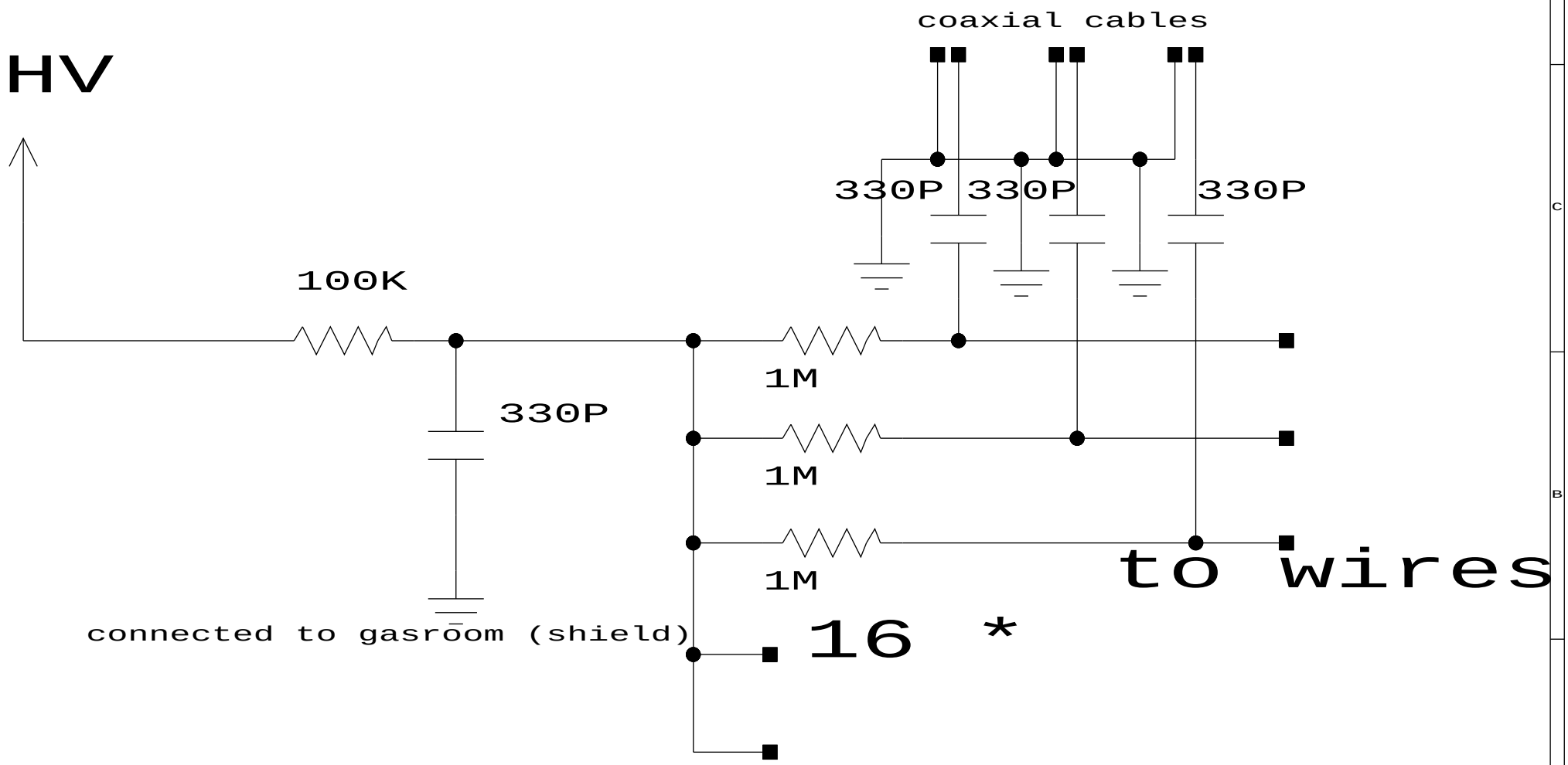

DESY IfH Zeuthen	OT- HV- boards		
	Design by: M. Pohl	Date: 4/97	Sheet: 1 of